STANDARD SPECIFICATIONS
FOR
SANITARY SEWER CONSTRUCTION

CITY OF PLYMOUTH, MINNESOTA

JANUARY 2020

ENGINEERING DIVISION

3400 PLYMOUTH BLVD.
PLYMOUTH, MN USA 55447-1482
TELEPHONE (763) 509-5500

Chris LaBounty, P.E.
City Engineer

These specifications are intended for inclusion into the contract documents. They only address the technical specifications and construction details of the referenced section.

THIS PAGE LEFT BLANK FOR PRINTING

SECTION 02100
STANDARD DETAIL SPECIFICATIONS
FOR
SANITARY SEWER CONSTRUCTION

CITY OF PLYMOUTH, MINNNESOTA USA

JANUARY 2020

INDEX

Print on Green Paper

02101 **SCOPE OF WORK**
02102 **SPECIFICATIONS WHICH APPLY**
02103 **SANITARY SEWER MATERIALS**
.1 Pipe Bedding Materials
.2 Polyvinyl Chloride Pressure Pipe (PVC)
.3 Polyethylene Pressure Pipe (PE)
.4 Ductile Iron Pipe (DIP)
.5 Sanitary Sewer Service Pipe and Connections
.6 Manholes
.7 Manhole Outside Drop Structures
.8 Manhole Castings
.9 Manhole Adjusting Rings
.10 Mortar
.11 External Uni-band Seal for manholes and adjusting ring
.12 I/I Barriers
.13 Pipe Sleeves
.14 U-Channel Posts & Markers

02104 **SANITARY SEWER INSTALLATION**
.1 Working Hours
.2 Inspection and Handling
.3 Pipe Laying Operations
.4 Jacking/Boring
.5 Directional Boring
.6 Connection and Assembly of Joints
.7 External Joint Sealing of Manhole Barrel Joints
.8 I/I Barriers

02105 **SANITARY SEWER TESTING**
.1 Leakage Testing
.2 Televising of Lines
.3 Mandrel/Deflection Test of Plastic Pipe

02106 **MEASUREMENT AND PAYMENT**

02107 **SANITARY SEWER DETAILS**
SS-1 Service Connection
SS-2 Riser-Service Connection
SS-3 Standard Sanitary Sewer Manhole
SS-4 Standard Drop Manhole #1
SS-5 Standard Drop Manhole #2
SS-6 Sanitary Sewer Bedding
SS-7 Watertight Casting-Manhole
SS-8 Watertight Casting-Flat Slab Manhole
SS-9 Off Road Utilities Access Drive

02101 SCOPE OF WORK

The work to be done under this contract shall include the furnishing of all labor, materials, tools and equipment to construct complete in place the sanitary sewer and all appurtenances as shown on the drawings, plans and as specified herein.

When installing public utilities in a new residential development all builder and developer construction activity shall pause until the public utilities have been installed, tested and the streets built.

The Contractor shall excavate all materials encountered, furnish and compact foundations where required, furnish and install all timbering, sheeting and bracing necessary to safely support the work, remove any ground water encountered during excavation operations, protect, repair, relocate, maintain and restore all sub-surface, surface and overhead structures directly disturbed, damaged or affected by construction operations and furnish all backfill and other appurtenant items and services as necessary. All site grading must be completed, certified by the project Engineer and all "Off Road" grading equipment removed from the site before starting any public utility work. When installing public utilities in a new residential development all builder and developer construction activity shall pause until the public utilities have been installed, tested and the streets built.

All off road sanitary sewer manholes must be accessible to the city's maintenance vehicles. (See Detail SS-9) A 12' wide bituminous access road with a turnaround shall be constructed to each structure. All off road manholes shall be marked with a flange post and a green reflectorized metal maker plate with white "M.H." lettering printed upon the plate. The marker plate shall face the closest access road. The flange post shall be located approximately 2' behind the manhole when facing the roadway. Costs to construct access roads shall be incidental to the sanitary sewer installation unless otherwise modified by the contract documents. If service disruption to an existing sewer line is anticipated then written notice shall be delivered to each home or business 48 hours prior to the disruption describing work, schedule, how it affects them, and a local telephone number of the Contractor they can call to discuss the project or any problems which could arise.

Records of sewer services installed shall be gathered by the contractor as the work progresses. Those records shall be turned over to the engineer upon completion of the work. The records will include the type of service

connection, distance installed from the downstream manhole, and the length of any riser installed.

02102 SPECIFICATIONS WHICH APPLY

All specifications contained herein, including attached detail drawings, together with the construction plans for the designated project or projects and including current versions of those portions of the following specification, as indicated by paragraph or designation number, shall apply unless modified within these specifications: American Society for Testing Materials (ASTM); American National Standards Institute (ANSI); American Water Works Association (AWWA); Minnesota Department of Transportation "Standard Specifications for Construction" current addition including Special Provisions (MnDOT); and The "City Engineers Association of Minnesota", Standard Specifications for Utility Construction CEAM current edition.

02103 SANITARY SEWER MATERIALS

All sanitary sewer pipe, fittings, manholes and appurtenances shall be new materials and shall be of the type, size, strength, and quality as shown on the plans and as specified herein and/or as indicated in the Special Provisions.

The contractor may be required to secure and deliver to the City Engineer or a designee, a written statement from the manufacturer assuring the quality and compliance to the applicable specification of all materials furnished and installed under this improvement project. This shall in no way relieve the Contractor of any responsibility as to the quality of materials furnished and installed.

02103.1 PIPE BEDDING MATERIAL –Sanitary Sewer Materials

Pipe bedding material shall be in accordance with standard detail plate SS-6 (sanitary sewer bedding), utilizing sand conforming to MnDOT specification 3149.2B2. The contractor shall provide Certification of the materials being used and will be required to perform field sampling for gradation test of any bedding materials used as required by the City Engineer. Copies of test results shall be submitted to the City in a timely manner. Bedding shall be considered incidental to the pipe installation unless noted otherwise in the contract documents.

02103.2 POLY VINYL CHLORIDE PIPE –Sanitary Sewer Materials

Poly Vinyl Chloride pipe (PVC) shall be used for gravity sanitary sewer 8" through 12" diameter with a maximum cover of 26' and shall conform to the requirements of ASTM D-3034 and ASTM F-679

for the size, standard dimension ratio (SDR), and strength requirements indicated on the Plans, Specifications, and Special Provisions. The grade used shall be resistant to aggressive soils or corrosive substances in accordance with the requirements of ASTM D-543 and be **green in color**. Pipe shall be new, manufactured within the past 12 months as determined from the date stamp on the pipe and free of defects. Pipe will be rejected if surface chalking from UV exposure is visible.

For main line sanitary sewer pipe and services 8" diameter and larger, SDR35 pipe shall be used for invert depths to 15 feet, and SDR26 pipe shall be used for invert depths from 15 feet to 26 feet. Ductile iron pipe shall be used when invert depth is over 26 feet. Pipe material for 4" & 6" diameter services shall be either schedule 40 PVC for up to 26' deep or D.I.P if main line is 26' deep or more.

02103.3 POLYETHYLENE (PE) PRESSURE PIPE AND FITTINGS –Sanitary Sewer Materials

Polyethylene pressure pipe and fittings shall conform to the requirements of AWWA C906 for the size and pressure class indicated on the Plans, Specifications and Special Provisions. Unless otherwise specified, the dimensions and tolerances of the pipe barrel should conform to Ductile Iron pipe equivalent outside diameters. The method of joining material shall be by the Thermal Butt- Fusion Method.

The HDPE fittings shall be standard commercial products manufactured by injection molding or by extrusion and machining, or, shall be fabricated from PE pipe conforming to this specification. The fittings shall be fully pressure rated by the manufacturer to provide a working pressure equal to the pipe, for 50 years' service at 73.4 degrees Fahrenheit with an included 2:1 safety factor. The fittings shall be manufactured from the same resin type, grade, and cell classification as the pipe itself. The manufacture of the fittings shall be in accordance with good commercial practice to provide fittings homogeneous throughout and free from crack, holes, foreign inclusions, voids, or other injurious defects. The fittings shall be as uniform as commercially practicable in color, opacity, density and other physical properties. The minimum "quick-burst" strength of the fittings shall not be less than that of the pipe with which the fitting is to be used.

02103.4 DUCTILE IRON PIPE –Sanitary Sewer Materials

Ductile iron pipe and fittings used in sanitary sewer construction for depths of 26 feet or more shall conform to the applicable dimensions and tolerances of ANSI Spec. A21.50 and A21.51. (Unless otherwise specified, ductile iron pipe shall conform to ANSI A21.51 standard thickness class 53.)

Every pipe and fitting shall be tar coated on the outside and shall be cement lined on the inside. Cement mortar lining shall be in accordance with ANSI, Specification A21.4. An approved water stop gasket shall be used at manhole connections as directed by the City Engineer or a designee. All DIP shall be polyethylene wrapped in conformance with ANSI/AWWA C105 A21.5. All underground installed bolts, T-bolts, nuts and any rodding required shall be stainless steel, ASTM F 593 Type 304 for all fittings.

Ductile iron pipe shall be grade 60-42-10 with 40/90 metal strength and shall be tested in accordance with ASTM Spec. A339. Fittings for ductile iron pipe shall conform to ANSI A 21.10. 12" and smaller shall be class 250; 16" and larger, class 150.

02103.5 SANITARY SEWER SERVICE PIPE AND CONNECTIONS –Sanitary Sewer Materials

Sanitary sewer service pipe and connections shall be 4" Schedule 40 P.V.C. or D.I.P. depending upon the depth of the service pipe (see section 02103.2 for depth zones). When connecting a new sanitary sewer service to an existing sanitary main the contractor shall use a "QwikSeal" connector manufactured by "Fernco, Inc." or approved equal. The connector used will depend upon the size of the main line and the depth of the service. Each will be installed with green color coated, insulated, #10 solid copper core tracer wire rated for underground service. If replacing an existing sewer service, then removal of the old service back to the main may be required. See the special provisions or the plans for direction. See Standard Detail Plates SS-1 & SS-2.

02103.6 MANHOLES –Sanitary Sewer Materials

Manholes and other special access structures shall be constructed at designated locations as required by the plans and in accordance with any standard detail drawings or special design requirements given therefore. Barrel and cone height shall be such as to provide a minimum adjustment of 4" using 2" rings and maximum adjustment of 12" with a 6" thick ring used for adjustments of 8" or greater with two 2" rings immediately below the casting assembly. Every pipe

penetration through the manhole wall shall have a rubber boot and stainless steel clamp to seal the pipe penetration from infiltration of ground water. Any field added opening for pipe shall be core drilled. Manholes shall be in manufactured accordance with MnDOT Specification 3622, and have a minimum diameter of 4′. See Standard Detail Plate SS-3.

02103.7 MANHOLE OUTSIDE DROP STRUCTURES –Sanitary Sewer Materials

Manhole drop structures shall be constructed as shown on City of Plymouth Standard Details SS-4 & SS-5. No inside drops allowed.

02103.8 MANHOLE CASTINGS –Sanitary Sewer Materials

Manhole castings shall be Neenah No. 1642, 1755 for watertight applications or approved equal with machine bearing surfaces, with two concealed pick holes and "Sanitary Sewer" stamped on the cover, unless noted otherwise. See Standard Detail Plate SS-3.

02103.9 MANHOLE ADJUSTING RINGS –Sanitary Sewer Materials

Manhole adjusting rings shall be High Density Polyethylene (HDPE). The rings shall provide a minimum adjustment of 4″ using 2″ rings and maximum adjustment of 12" with a 6″ or 4″" thick ring used for adjustments of 8" or greater. Joints between structure, rings and casting shall be sealed with a Butyl caulk. Solid reinforced concrete adjusting rings may be used in special situations only with **prior** written approval by the City Engineer. See Standard Detail Plate SS-3.

02103.10 MORTAR –Sanitary Sewer Materials

Mortar for use in masonry construction shall be an air-entrained mixture of one part Masonry cement, Type M, and two parts mortar sand, with sufficient water to produce proper consistency, and with sufficient air-entraining agent added to maintain an air content within the range of 7 to 10 percent. Mortar shall meet the requirements of ASTM C-270.

02103.11 EXTERNAL UNI-BAND SEAL –Sanitary Sewer Materials

Each manhole joint shall be sealed with an external rubber sleeve similar to the Sealing Systems Inc. Infi-Shield Gator Wrap as manufactured by Sealing System, Inc. or approved equal. The seal shall be made of a 6″ wide, stretchable, self-Shrinking, intra-curing halogenated base rubber with a minimum thickness of 30 mils. The back side of each unit shall be coated with a cross-linked reinforced butyl adhesive. The butyl adhesive shall be non-hardening sealant with a minimum thickness of 30 mils. The seal shall be designed to

stretch around the joint and then overlap creating a cross-link and fused bond between the rubber and butyl adhesive. See Standard Detail Plate SS-3.

02103.12 I/I BARRIERS –Sanitary Sewer Materials
Striker Products I/I barriers or Ess Brothers "27Sx18 Alignment Barrier" shall be used on all new and existing sanitary sewer manholes. The I/I Barriers shall be a medium density polyethylene as defined by ASTM designation D 1248. Adaptor Inc. or "E3 Chimney Seal" or approved equal can be used when reconstructing existing manholes with engineer's approval. See Standard Detail Plate SS-3.

02103.13 PIPE SLEEVES –Sanitary Sewer Materials
When 4" through 12" diameter sewer line work requires a sleeve be installed the contractor shall use a "Shear Guard" coupling by Onset or approved equal. This shall be in lieu of using a "Fernco" adaptor.

O2103.14 CHANNEL POSTS & MARKERS -Sanitary Sewer Materials
U-Channel post used for structure marking shall be green, 6ft in length weighting 3lb/ft. and punched full length with 3/8" diameter holes 1" on center. Marker signs shall be 0.063" thick aluminum blanks measuring 3" wide by 8" high with a high intensity green reflectorized background with white 2" high letters. Markers shall be attached to the post with two stainless steel bolts and nuts. Posts and markers shall be considered incidental unless otherwise noted.

02104 SANITARY SEWER INSTALLATION

02104.1 WORKING HOURS –Sanitary Sewer Installation
The City Engineer or a designee shall be notified at least 48 hours prior to commencing any work. Phone # (763) 509-5500. Contractors are subject to being shut down and or having work rejected if proper notification is not given to the City.

Work shall not commence before 7:00 a.m. nor extend beyond sundown Monday through Friday. On Saturdays, work hours are from 8:00 a.m. to 6:00 p.m. No work is permitted on Sundays or Holidays unless authorized by the City. Existing roadways shall not be restricted between 7 & 9 AM and 3 & 6 PM unless approved by the City Engineer.

The definition of "Work" also includes the starting of equipment and the delivery of materials to the job site.

02104.2 INSPECTION AND HANDLING –Sanitary Sewer Installation

Proper and adequate implements, tools, and facilities satisfactory to the City Engineer or a designee shall be provided and used by the Contractor for the safe and convenient prosecution of the work. During the process of unloading, all pipe and accessories shall be inspected by the Contractor for damage. The Contractor shall notify the City Engineer or a designee of all material found to have cracks, flaws or other defects. The City Engineer or a designee shall inspect the damaged materials and have the right to reject any materials found to be unsatisfactory. The Contractor shall promptly remove all rejected material from the site. All materials shall be handled carefully, so as to prevent damage to protective coatings, linings, and joint fillings; preclude contamination of interior areas; and avoid jolting contact, dropping, or dumping.

All work and materials are subject to tests by the Owner at such frequency as may be determined by the City Engineer or a designee.

While suspended and before being lowered into laying position, each pipe section and appurtenant unit shall be inspected by the Contractor to detect damage or unsound conditions that may need corrective action or be cause for rejection. The Contractor shall inform the City Engineer or a designee of any defects discovered and the City Engineer or a designee will prescribe the required corrective actions or order rejection.

Immediately before placement, the joint surfaces of each pipe section and fitting shall be inspected for the presence of foreign matter, coating blisters, rough edges or projections, and any imperfections so detected shall be corrected by cleaning, trimming, or repair as needed.

02104.3 PIPE LAYING OPERATIONS –Sanitary Sewer Installation

Open cut placement of public PVC or H.D.P.E pipe shall not occur after November 30th or before March 31st.

Trench excavation and bedding preparations shall proceed ahead of pipe placement to permit proper laying and joining of the pipe units at the prescribed grade and alignment without unnecessary deviation or hindrance.

All foreign matter or dirt shall be removed from the inside of the pipe and fittings before they are lowered into position in the trench and

they shall be kept clean by approved means during and after laying. The sewer materials shall be carefully lowered into laying position by the use of suitable restraining devices. Under no circumstances shall the pipe be dropped into the trench.

At the time of pipe placement, the bedding conditions shall be such as to provide uniform and continuous support for the pipe between bell holes. Bell holes shall be excavated as necessary to make the joint connections, but they shall be no larger than would be adequate to support the pipe throughout its length. No pipe material shall be laid in water or when the trench or bedding conditions are otherwise unsuitable or improper.

When in the City Engineer or a designee's opinion, placement or handling precautions prove inadequate, the Contractor shall provide and install suitable plugs or caps effectively closing the open ends of each pipe section before it is lowered into laying position, and they shall remain so covered until removal is necessary for connection of an adjoining unit.

Unless otherwise permitted by the City Engineer or a designee, bell and spigot pipe shall be laid with the bell ends facing upgrade and the laying shall start on the downgrade end and proceed upgrade. As each length of bell and spigot pipe is placed in laying position, the spigot end shall be centered in the bell and the pipe forced home and brought to correct line and grade. The pipe shall be secured in place with approved backfill material, which shall be thoroughly compacted by tamping around the pipe to a height of at least 12 inches above the top with hand operated mechanical tamping devices or by hand. Backfill in the bell area shall be left short until the next section of pipe is placed.

Connection of pipe to existing lines or previously constructed manholes shall be accomplished as shown in the Plans or as otherwise approved by the City Engineer or a designee. Core drilling the pipe penetration into the existing manhole and the installation of a rubber boot is required. Where necessary to make satisfactory closure or produce the required curvature, grade or alignment deflections at joints shall not exceed that which will assure tight joints and comply with any limitations recommended by the pipe manufacturer.

Entrance of foreign matter into pipeline openings shall be prevented at all times to the extent that suitable plugs or coverings can be kept

in place over the openings without interfering with the installation operations.

02104.4 JACKING/BORING –Sanitary Sewer Installation

The terms "auger", "boring", "jack", "jacking", and "tunneling" in the proposal, specifications, and plans refers only to non-open cut construction. The Contractor shall inspect and verify soil conditions to his own satisfaction in order to determine the type of construction to employ. During the construction, the Contractor shall be responsible for protecting all existing utilities above or below the pipe invert.

The minimum inside diameter of the casing pipe shall be four (4) inches greater than the outside diameter of the bell of the carrier pipe. For any installation beneath a railroad, the top of the casing pipe shall not be closer than the specified dimensions indicated in the railroad permit.

The steel casing minimum wall thickness shall be as specified on the Plans, in the Special Provisions, or in the applicable Permit. Where required by the City Engineer or a designee, two 17-pound anode packs shall be attached to the casing for corrosion protection.

A 1-1/2 inch pipe shall be forced along the top of the casing pipe. The front end of this pipe shall be 18 inches behind the front end of the casing pipe. A mixture of water and bentonite clay shall be forced through this pipe at all times during the casing installation to fill any voids that may be present above the casing pipe. Upon completion of the casing installation, this pipe shall be slowly withdrawn while bentonite is forced through the pipe to fill any remaining voids.

The Contractor shall prevent excavated materials from flowing back into the excavation during the non-open cut construction. This shall include the use of a shield conforming to the size and shape of the casing that will prevent materials from flowing into the leading edge of the casing. The jacking machine used shall be capable of controlling line and grade and shall conform to the size and shape of the casing pipe.

No jacking/augering of pipe will be allowed below the water table unless the water table has been lowered sufficiently to keep the water below the pipe being installed. The use of water under pressure (jetting) or puddling will not be permitted to facilitate jacking/augering operations.

If any installation is augered, the head shall be approved by the City Engineer or a designee and the auger shall be located six (6) inches behind the lead edge of the casing or carrier pipe.

If a void develops, the jacking/augering shall be stopped immediately and the void shall be filled by pressure grouting. The grout material shall consist of a sand-cement slurry of at least two sacks of cement per cubic yard and a minimum of water to assure satisfactory placement.

Skids and blocking shall be used as necessary to install the carrier pipe to the proper line and grade inside the casing pipe. Voids between carrier and casing pipes shall be filled with sand and the casing pipe sealed at both ends with a suitable material to prevent water or debris from entering the casing pipe.

02104.5 DIRECTIONAL BORING –Sanitary Sewer Installation

Directional boring/drilling installation shall be accomplished where required on the Plans or in the Special Provisions to minimize disturbance of existing surface improvements. The installer shall have a minimum of three years of experience in this method of construction and have installed at least 1,000 feet of 8-inch or larger diameter pipe to specified grades. The field supervisor employed by the Contractor shall have at least three years of experience and shall be at the site at all times during the boring/drilling installation, and be responsible for all of the work.

The Contractor shall submit boring/drilling pit locations to the City Engineer or a designee before beginning construction.

The drilling equipment shall be capable of placing the pipe as shown on the plans. The installation shall be by a steerable drilling tool capable of installing continuous runs of pipe, without intermediate pits, a minimum distance of 200 feet. The guidance system shall be capable of installing pipe within 1-1/2 inch of the plan vertical dimensions and 2 inches of the plan horizontal dimensions. The Contractor shall be required to remove and reinstall pipes which vary in depth and alignment from these tolerances.

Pull back forces shall not exceed the allowable pulling forces for the pipe being installed. Drilling fluid shall be a mixture of water and bentonite clay and shall be designed to meet existing soil conditions.

Disposal of excess fluid and spoils shall be the responsibility of the Contractor.

02104.6 CONNECTION AND ASSEMBLY OF JOINTS – Sanitary Sewer Installation

All pipe and fitting joints shall fit tightly and be fully closed. Spigot ends shall be marked as necessary to indicate the point of complete closure. All joints shall be watertight in all sanitary sewer pipe lines. Where specified, the joints in certain assemblies shall be made structurally integral by being completely encased in concrete to form a rigid watertight unit as indicated in the standard drawings. All joints shall be assembled gasket seal joints.

02104.7 EXTERNAL JOINT SEALING OF MANHOLE BARREL JOINTS –Sanitary Sewer Installation

Each manhole barrel joint shall be sealed with a 6" wide external rubber sleeve similar to the Infi-Shield Gator Wrap as manufactured by Sealing Systems, Inc. or approved equal. The seal shall be a single continuous rubber band installed on a clean surface to prevent leakage of water through the joint sections of a manhole. Manhole joint sealing shall be considered incidental unless otherwise noted.

02104.8 I/I BARRIERS –Sanitary Sewer Installation

The Striker Products I/I Barrier or Ess Brothers "27Sx18 Alignment Barrier" is cut to height and installed on top of the manhole cone. The cut height is determined by adding the adjustment ring stack up dimension to the inside height of the cover frame. Caution should be used to not interfere with the complete seating of the cover into the frame. The joints between the manhole cone and the I/I or Alignment barrier is sealed using butyl mastic caulk. The (HDPE) adjustment rings, cover frame and cover are then installed as usual.

The bottom surface of the I/I or Alignment barrier flange shall be sealed to the manhole cone top surface using a butyl sealant such as "Ramnek" or specified by the manufacturer.

The sealant shall be applied to the top surface of the manhole cone section only. Sufficient sealant must be used to accommodate flaws in the cone surface and out-of-flat conditions. The amount of sealant and its placement will be determined by the condition of the cone. This determination will be the responsibility of the contractor installing the I/I BARRIER. The Striker Products I/I BARRIER is then centrally seated on the cone against the sealant.

The bottom adjustment ring is then centrally placed on the top surface of the I/I BARRIER flange using no sealant.

When (HDPE) adjustment rings with a vertical tongue are used, the tongue must be cut off to allow the bottom ring to lay flush on the I/I or Alignment barrier flange. This removal should be done per instructions from the adjustment ring manufacturer. The chimney section is then completed based on the type of adjustment rings being utilized. The I/I or Alignment barrier shall be installed per the manufacture's installation instruction on a clean/dry structure. See Standard Detail Plate SS-3. I & I barriers and adjusting rings shall be considered incidental unless otherwise noted.

02104.9 ADJUSTING CASTING –Sanitary Sewer Installation

Adjust castings within 10 days after initial bituminous course placement. Keep excavation of adjustments to a minimum. Replace excavated areas in kind. Replace or install all adjusting rings and set the top of casting to ½" below and parallel to the proposed roadway surface. Install (2"x2"x¼") plastic of fiberglass shims between the lower ring and the concrete manhole top as necessary to reach this elevation. Set casting and each ring on inflow and infiltration barrier. Provide 4" P.E. adjusting ring if structure will have 4 or 5 rings. Use 4" rings minimum and 12" maximum rings when setting castings.

02105 SANITARY SEWER TESTING REQUIREMENTS

In order to assure quality materials and workmanship, the following tests shall be required unless waived by the City Engineer or a designee. The City Engineer or a designee shall be present for all tests of public utilities and shall be notified at least 48 hours in advance of the specific test by calling (763) 509-5500. Testing shall be completed after all the utility pipes have been installed in the area to be tested and prior to commencement of the street construction.

All tests shall be in accordance with CEAM standards or what is required within this specification. Individuals qualified to perform and evaluate such tests shall do all testing. The contractor shall pay for all tests required in these specifications. Copies of the results shall be submitted to the City Engineering Division. Disposal of any wastewater or any test water into the City sanitary sewer system is NOT allowed.

In the event of a test failure on any test section, the section shall be repaired or replaced, with all repair work subject to approval of the City. The repaired or replaced section shall be retested for leakage, deflection

and re-televised in conformance with the specifications contained herein. All repairs, replacement and retesting shall be at the Contractor's expense.

02105.1 LEAKAGE TESTING

.1A EXFILTRATION

The pipeline shall be sealed with a plug whose sealing length is greater than the diameter of the pipe and constructed in such a manner that it will not require external blocking or bracing and maintain a seal against the line's test pressure.

All wyes, tees, outlets or ends of lateral sewers shall be suitably capped and braced to withstand the internal pressures. Such caps or plugs shall be easily removable.

One plug shall be tapped for the air supply hose and the return air pressure hose. The air supply hose, connected from the compressor to the plug shall be a throttling valve, bleeding valve and shut off valve for control. The air pressure tap shall have a sensitive pressure gauge, 0 to 10 psi range, protected by a gauge cock and a pressure relief valve set at 10 psi.

In performing the test, air is added slowly to the pipeline until pressure inside the pipeline reaches 4.0 psi. If air is added too rapidly, the test accuracy will decrease because a change in temperature also has an effect on the change in pressure. When the air pressure inside the pipeline reaches 4.0 psig above external hydrostatic pressure, the supply air is stopped. A minimum two-minute time interval is allowed for the temperature difference to stabilize before the actual test is performed. If the air pressure drops below 3.5 psig during this time interval, more air will be supplied to the pipeline and throttled to maintain a pressure between 3.5 psig and 4.0 psig for a minimum of two minutes after which time the supply air will be shut off.

The portion of line being tested shall be accepted if the portion under test does not lose air at a rate greater than 0.0015 cfm per square foot (for PVC & DIP) or 0.003 cfm per square foot (for RCP) per internal pipe end area at an average pressure of 3.0 psig greater than any back pressure exerted by groundwater that may be over the pipe at the time of test.

All test gauges are to be set up above ground.

Air test: For a typical 8" PVC pipe the test would be at four pounds held for five minutes with no more than a 0.5 psi loss. For others see the following table.

The test shall be accomplished by determining the time in minutes for the pressure to decrease from 4.0 psig to 3.5 psig greater than the average groundwater that may be over the pipe. That time shall not be less than the time shown on the given diameter in the following table:

Pipe Dia. in Inches	Minutes for PVC & DIP	Minutes for RCP
4	2.0	1.0
6	3.0	1.4
8	5.0	1.9
10	8.0	2.4
12	12.0	2.9
15	18.0	3.4
18	25.0	4.3
21	35.0	5.0
24	45.0	5.7

If the pipeline fails to meet the requirements of the test, the Contractor shall, at their own expense, determine the source of leakage and then repair or replace that portion of the pipe.

.1B Hydrostatic test

Hydrostatic test rate of loss from pipe with 3 feet of head above the invert or groundwater in the second hour of the 2 hour test cannot exceed CEAM standard.

.1C Infiltration

Same loss as hydrostatic test

.1D Forcemain Hydrostatic Test

Pressure - 75 p.s.i. for 2 hours with 0 (zero) pounds allowable pressure loss during the first hour and no more than 2 pounds allowable pressure loss during the second hour. Gauge to be used will be an Ashcroft, Model 1082, 4½" diameter in one p.s.i. increments or approved equal.

02105.2 TELEVISING OF LINES

All sanitary sewer lines shall be televised and the video report in MPEG format along with a written report to be submitted to the City

for review. Televising shall be considered incidental unless otherwise noted. Video reports can be submitted on CD-ROM, DVD compact disks, thumb drives, internet cloud or other approved means. All lines must be flushed/jetted to assure they are cleaned prior to televising. The video report will be used to view the condition of the sanitary sewer pipe prior to acceptance. Workmanship and cleanliness of the installation will be checked. If the line requires cleaning or repairs then that segment shall be re-televised afterwards and the new report will be submitted to the City for review. This shall be repeated until the segment of the sanitary sewer line is clean and or repaired. Video reports shall become the property of the City and contain the following:

.2A Reference the start and end of each video segment as it begins, by clearly identifying the manhole number where the video segment begins and the manhole number where the video segment ends.

.2B Footages along the sewer line must be shown on the video report and zeroed out at the beginning of each segment starting from the center of the manhole.

.2C The video camera shall be guided forward at a moderate to slow pace along the bottom of the pipe.

.2D The camera shall stop and rotate up to view each service wye.

.2E The camera shall stop at any unusual instances that are viewed while in progress and provide a more detailed and longer view of the specific instance (i.e. – bad joint, dirt in lines, settlement in line, etc.).

02105.3 MANDREL/DEFLECTION TEST OF PLASTIC PIPE

Deflection tests shall be performed on all plastic gravity sewer pipes, including stubs over 50’ in length. The test shall be conducted after the sewer trench has been backfilled to the desired finished grade and has been in place for 30 days.

The deflection test shall be performed by pulling a rigid ball or nine-point mandrel through the pipe without the aid of mechanical pulling devices. The ball or mandrel shall have a minimum diameter equal to 95% of the actual inside diameter of the pipe. The maximum allowable deflection shall not exceed five percent of the pipe's

internal diameter. The line will be considered acceptable if the mandrel can progress through the line without binding. The time of the test, method of testing, and the equipment to be used for the test shall be subject to the approval of the City Engineer or a designee.

All testing shall be performed by the Contractor at his expense without any direct compensation being made therefore, and he shall furnish all necessary equipment and materials required unless otherwise noted.

02106 MEASUREMENT AND PAYMENT

All items will be measured separately according to design designation as indicated in the Pay Item name and as may be detailed and defined in the Plans, Specifications, or Special Provisions. Pipe will generally be designated by size (inside diameter or span), strength class, kind or type, and laying condition.

Complete-in-place items shall include all component parts thereof as described or required to complete the unit, but excluding any excesses covered by separate Pay Items. Linear measurement of piping will include the running length of any special fittings (tees, wyes, elbows, gates, etc.) installed within the line of measure between specified terminal points.

02107 SANITARY SEWER DETAIL PLATES

SS-1 through SS-9

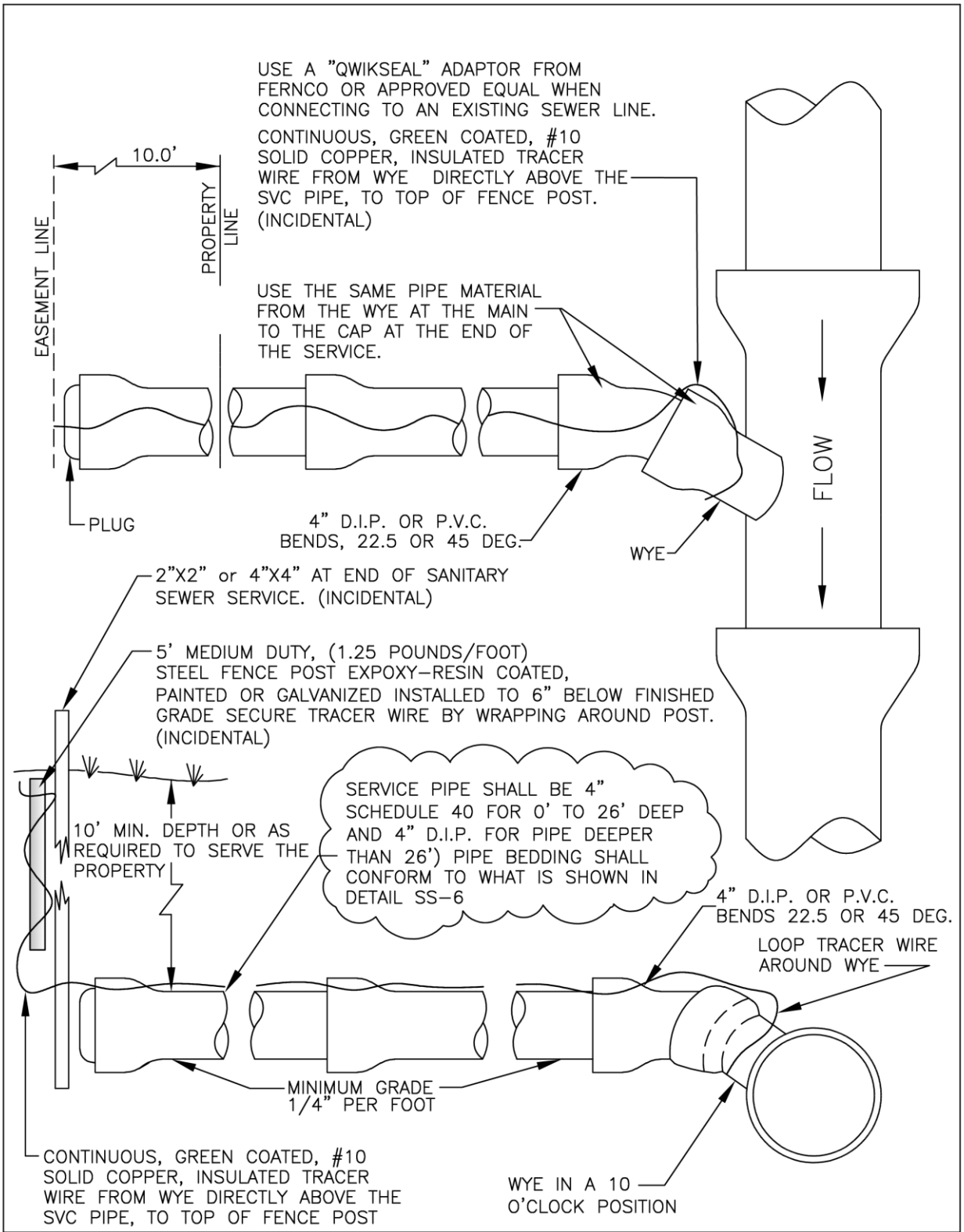

	STANDARD DETAILS SERVICE CONNECTION CITY OF PLYMOUTH	PUBLISHED 1-20
		CITY PL. NO. SS-1 REVISED 1-18

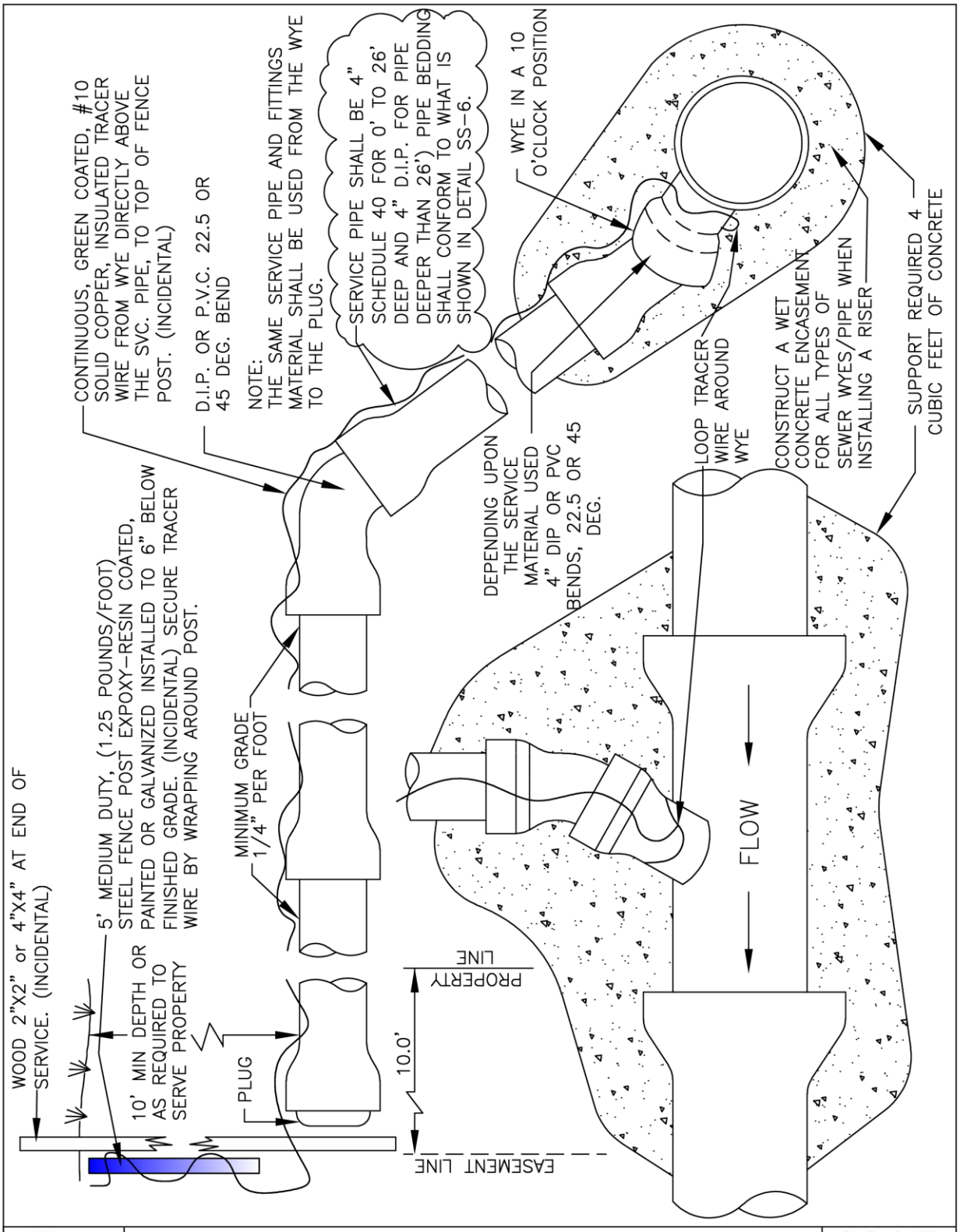

	STANDARD DETAILS RISER-SERVICE CONNECTION CITY OF PLYMOUTH	PUBLISHED 1-20
		CITY PL. NO. SS-2 REVISED 1-18

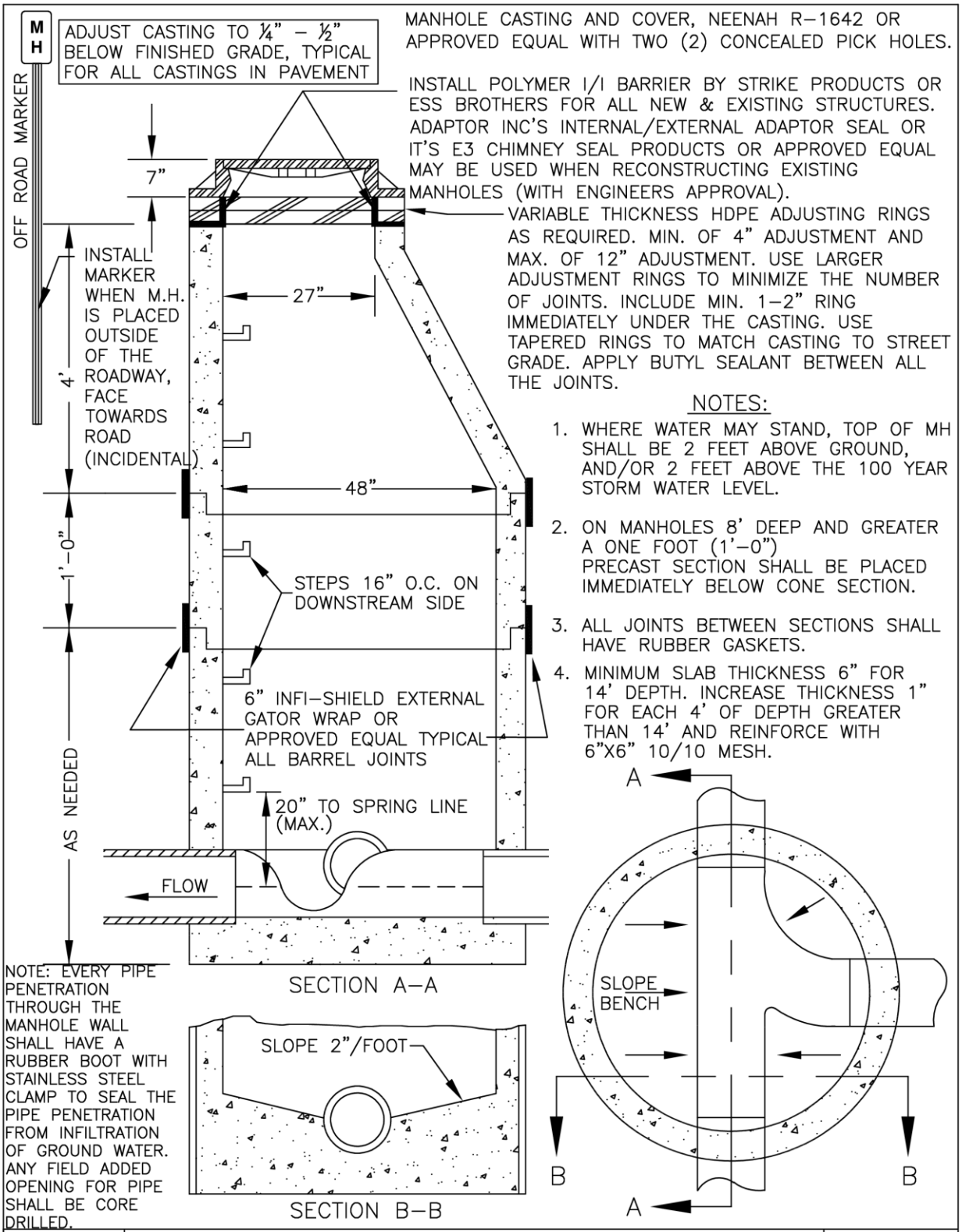

STANDARD DETAILS
STANDARD SANITARY SEWER MANHOLE
CITY OF PLYMOUTH

PUBLISHED 1–20

CITY PL. NO. SS–3
REVISED 1–17

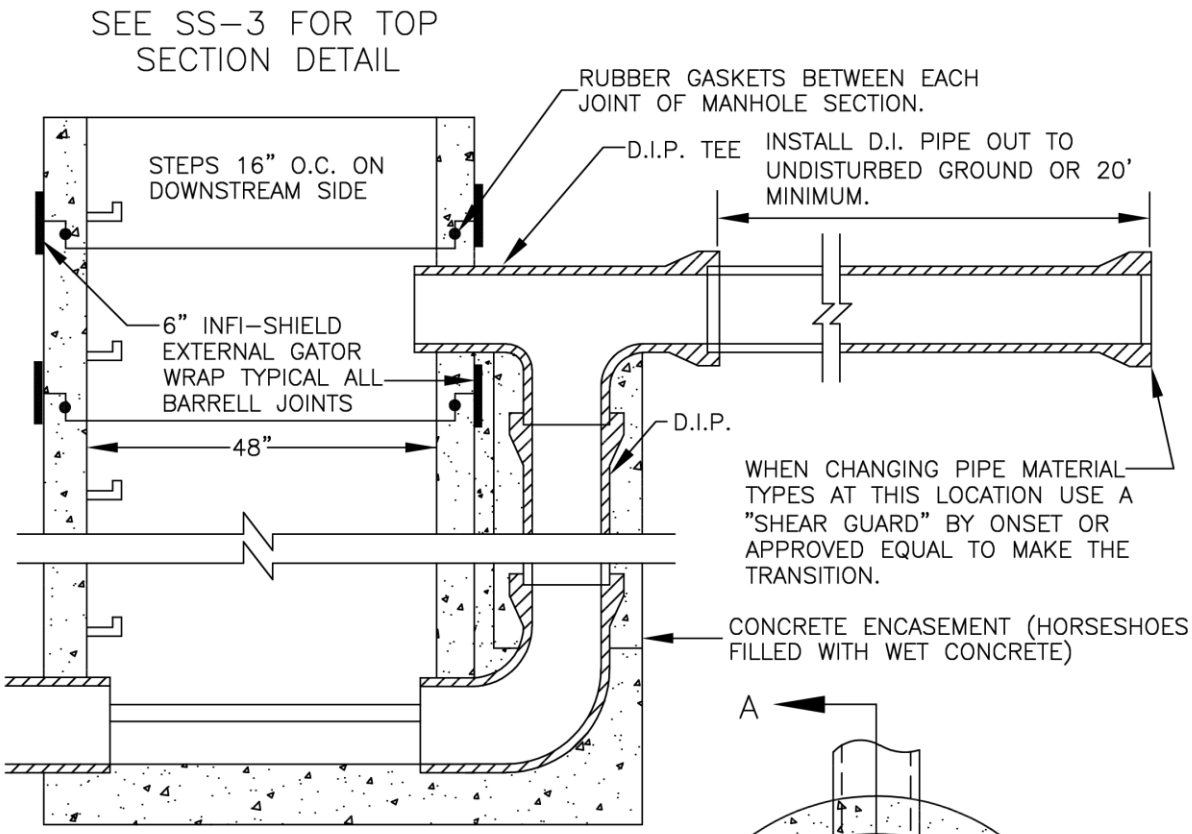

SECTION A–A

NOTE:
THE TOP OF THE DROP PIPE SHALL BE EQUAL TO OR ABOVE THE TOP OF THE OUTLET PIPE. IF THE OUTLET PIPE IS MORE THAN TWICE THE DIA. OF THE DROP PIPE, THEN THE FLOW LINE OF THE DROP PIPE SHALL BE EQUAL OR ABOVE THE SPRING LINE OF THE OUTLET PIPE.

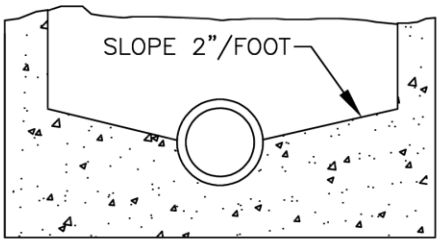

SECTION B–B

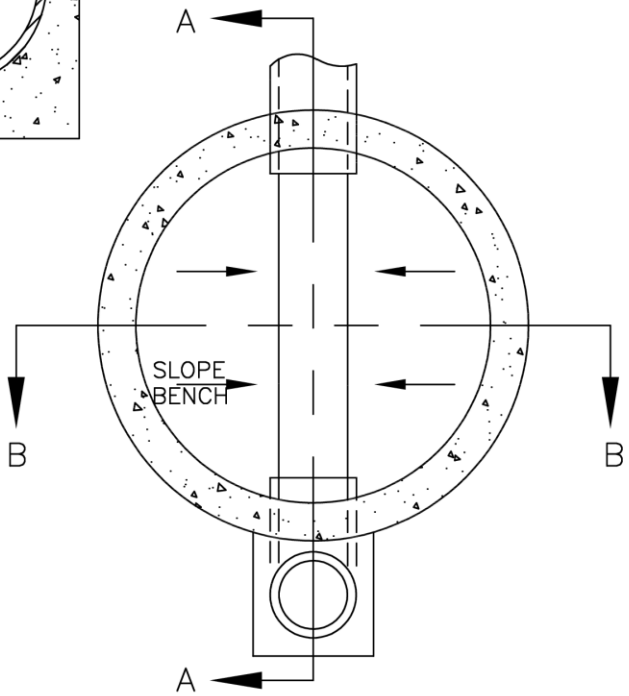

NO INSIDE DROPS ALLOWED

	STANDARD DETAILS STANDARD DROP MANHOLE #1 CITY OF PLYMOUTH	PUBLISHED 1–20 CITY PL. NO. SS–4 REVISED 1–17

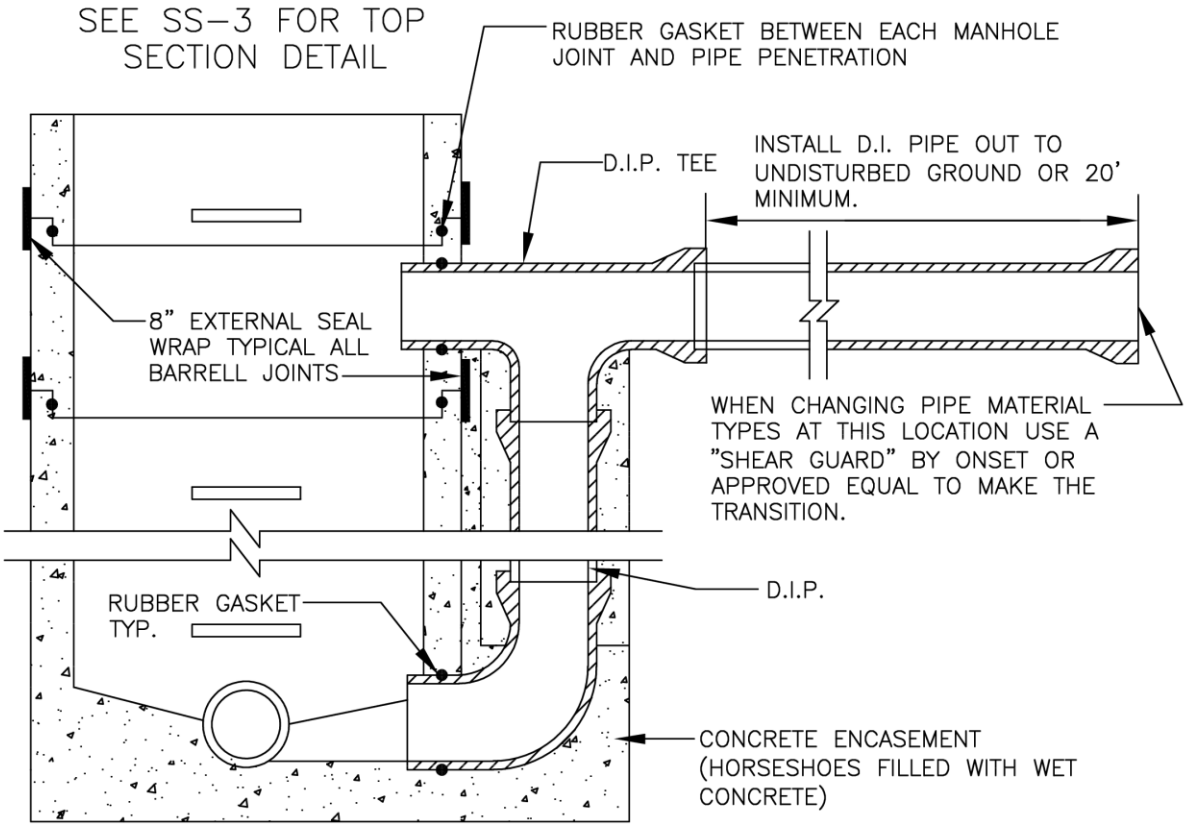

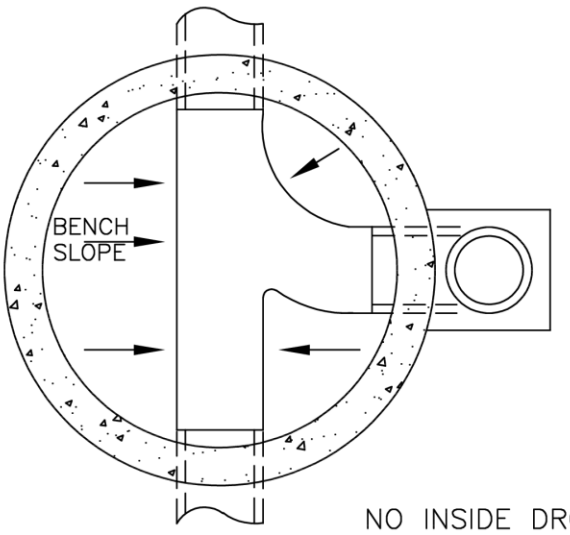

NOTE:
THE TOP OF THE DROP PIPE SHALL BE EQUAL TO OR ABOVE THE TOP OF THE OUTLET PIPE. IF THE OUTLET PIPE IS MORE THAN TWICE THE DIA. OF THE DROP PIPE, THEN THE FLOW LINE OF THE DROP PIPE SHALL BE EQUAL OR ABOVE THE SPRING LINE OF THE OUTLET PIPE.

NO INSIDE DROPS ALLOWED

	STANDARD DETAILS STANDARD DROP MANHOLE #2 CITY OF PLYMOUTH	PUBLISHED 1–20
		CITY PL. NO. SS–5 REVISED 1–17

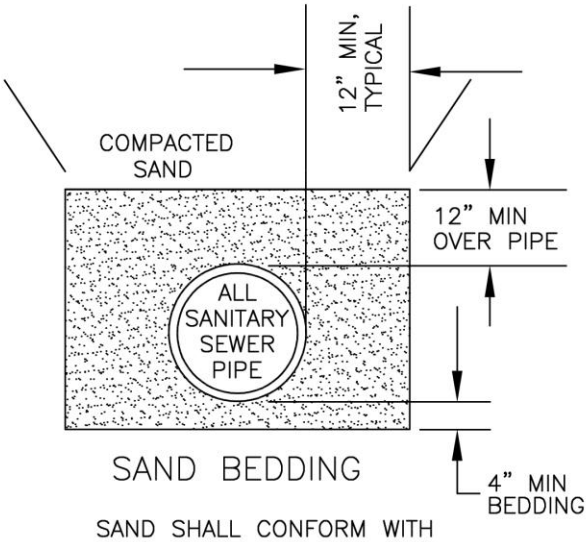

SAND BEDDING

SAND SHALL CONFORM WITH MN/DOT SPEC. 3149.2B2 (SELECT GRANULAR)

NOTE:
BEDDING SHALL BE CONSIDERED INCIDENTAL TO THE PIPE UNLESS MODIFIED IN THE CONTRACT DOCUMENTS. BEDDING REQUIRED FOR ALL MAINS AND SERVICES.

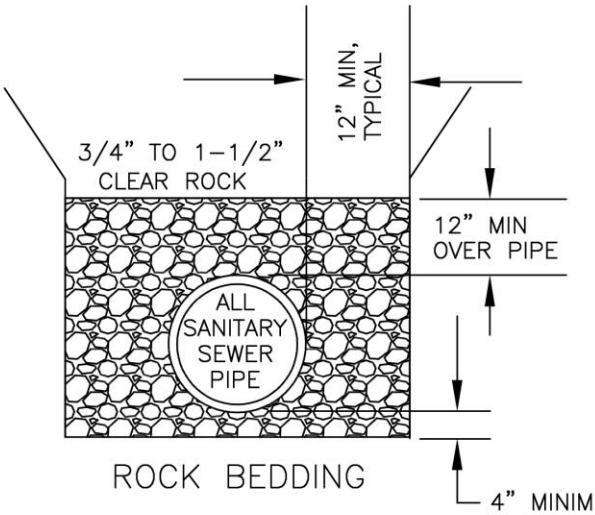

ROCK BEDDING

4" MINIMUM IN A STABLE SUBGRADE. IF SUBGRADE IS UNSTABLE USE AS MUCH ROCK AS NECESSARY TO STABILIZE.

	STANDARD DETAILS SANITARY SEWER BEDDING CITY OF PLYMOUTH	PUBLISHED 1-20
		CITY PL. NO. SS-6 REVISED 1-17

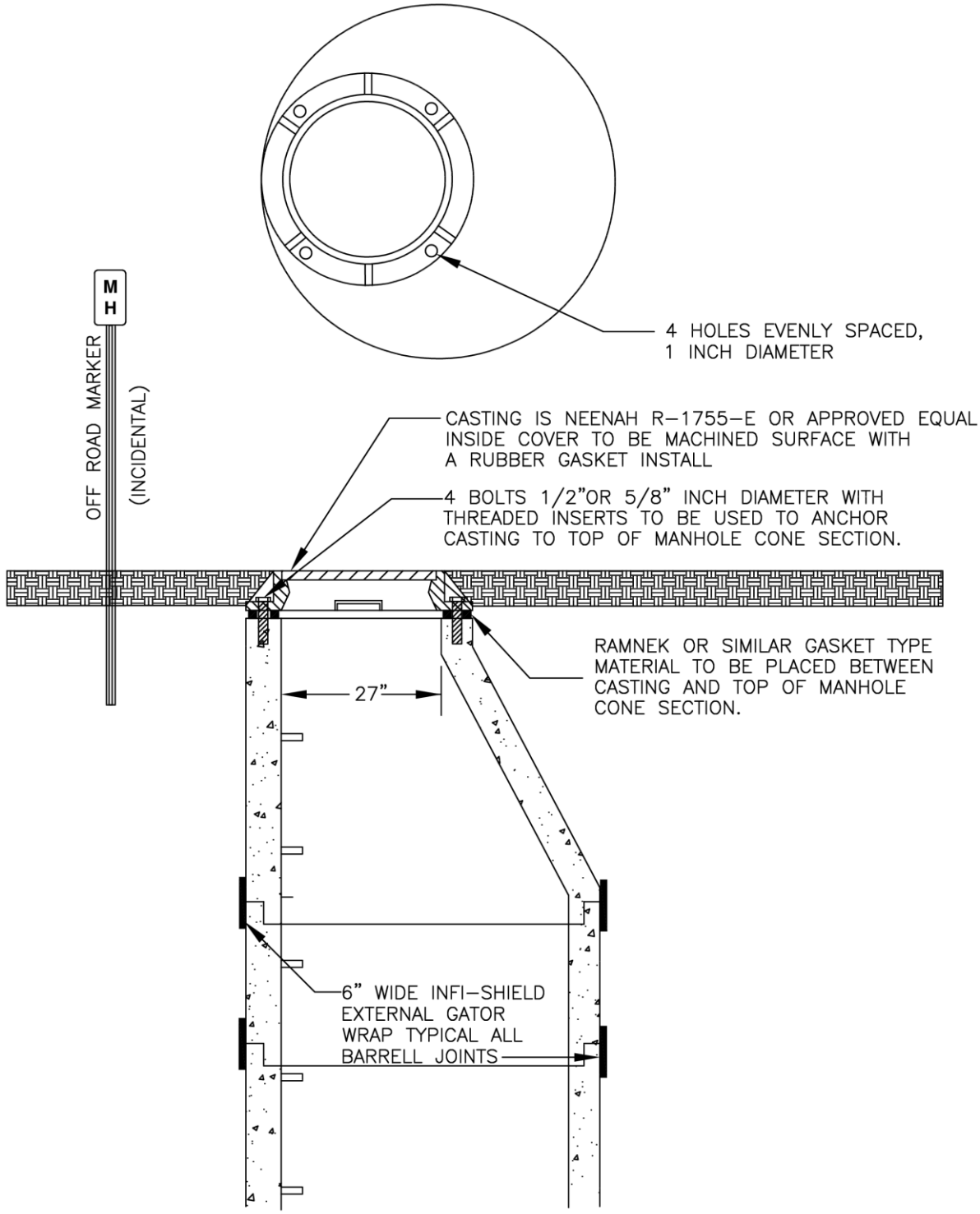

	STANDARD DETAILS WATERTIGHT CASTING-MANHOLE CITY OF PLYMOUTH	PUBLISHED 1-20
		CITY PL. NO. SS-7 REVISED 1-17

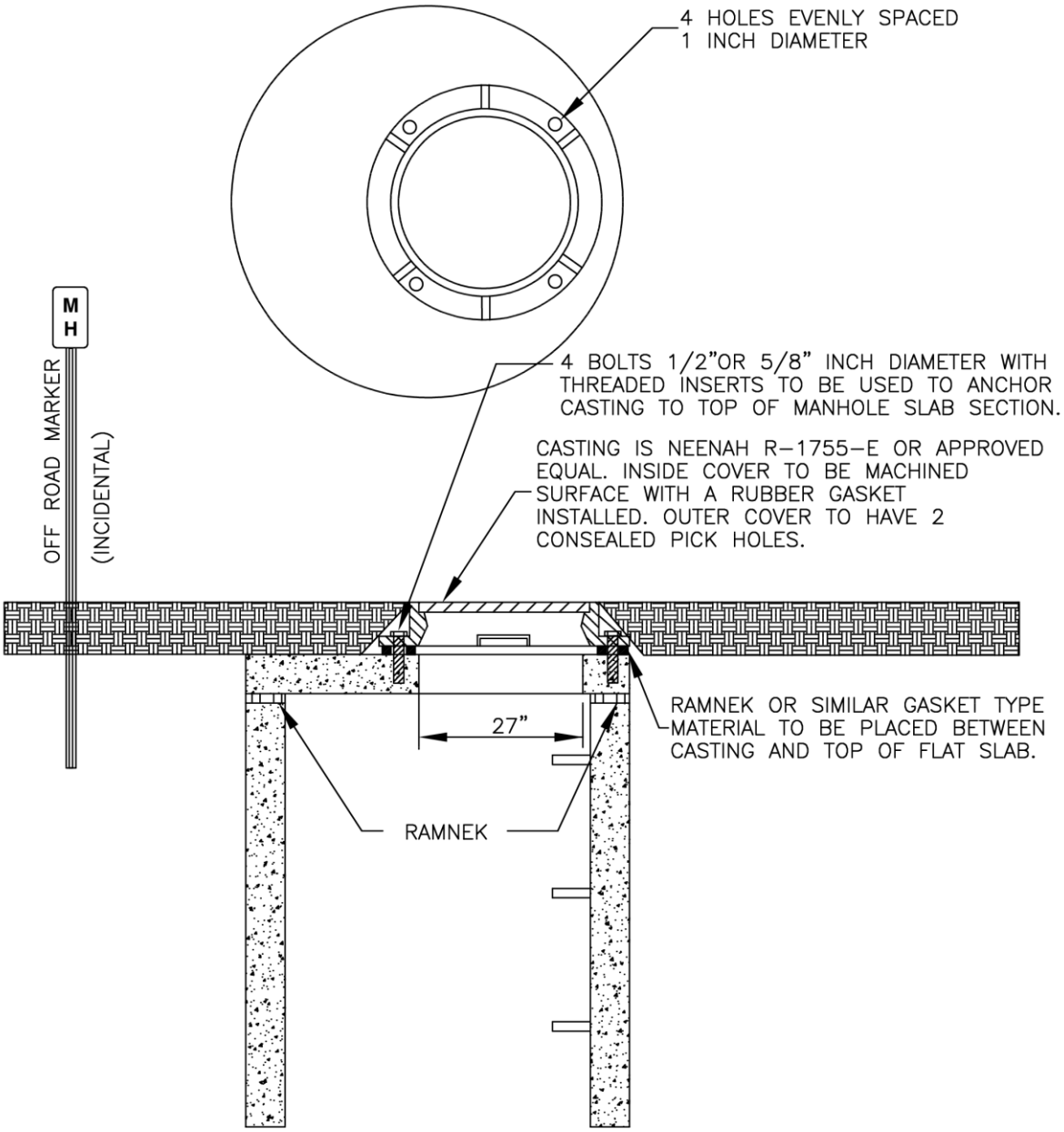

	STANDARD DETAILS WATERTIGHT CASTING-FLAT SLAB MANHOLE CITY OF PLYMOUTH	PUBLISHED 1-20 CITY PL. NO. SS-8 REVISED 1-17

OFF ROAD SANITARY SEWER MANHOLES MUST BE MADE ACCESSIBLE TO THE CITY'S MAINTENANCE VEHICLES. A 12' WIDE ACCESS ROAD WITH A TURN AROUND SHALL BE CONSTRUCTED BY EACH STRUCTURE. (INCIDENTAL UNLESS OTHERWISE NOTED)

WHERE A PEDESTRIAN TRAIL IS TO BE USED FOR SANITARY SEWER STRUCTURE ACCESS THIS DETAIL SHALL SUPERCEDE THE TYPICAL TRAIL DETAIL EXCEPT THE SLOPES SHALL BE DESIGNED TO MEET ADA REQUIREMENTS.

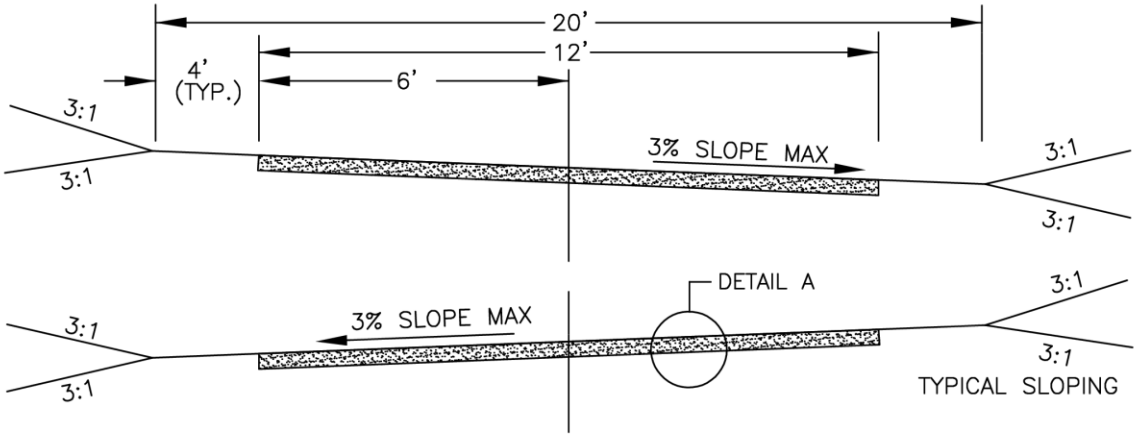

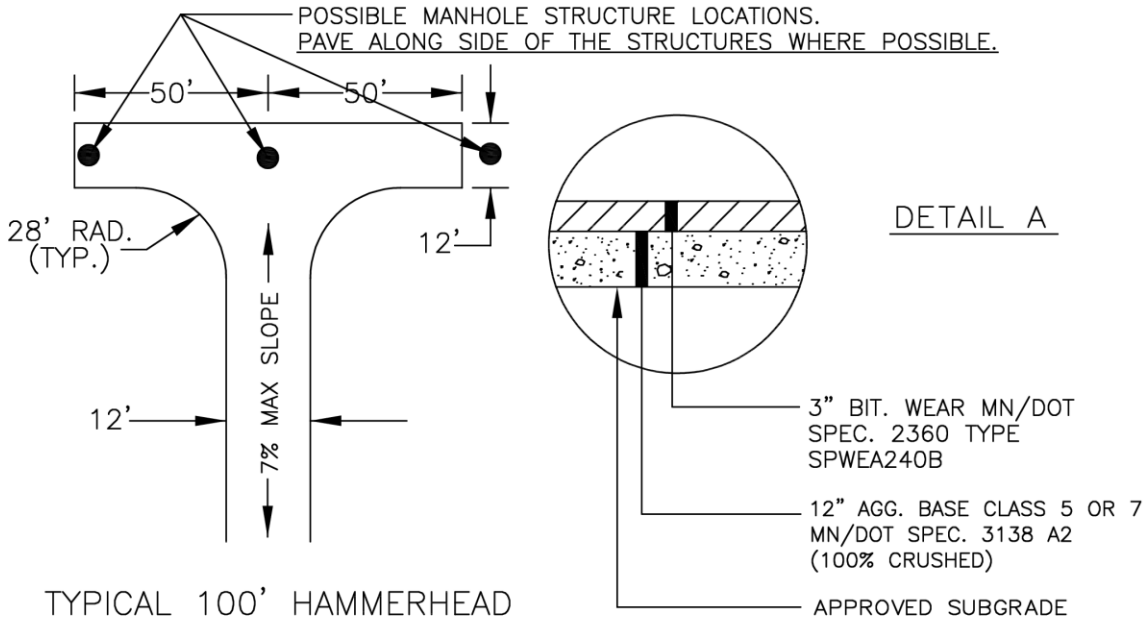

TYPICAL 100' HAMMERHEAD

	STANDARD DETAILS OFF ROAD UTILITIES ACCESS DRIVE CITY OF PLYMOUTH	PUBLISHED 1–20 CITY PL. NO. SS–9 REVISED 1–17